Standard Rack and Pinion Drive
Assembly & Installation Instructions

v2020Q4.1

Tools List

Required tools for assembly and installation of Standard Rack & Pinion Drives:

- Imperial Allen Wrench Set

  - 3/32", 5/32", 3/16", 1/4"

- Metric Allen Wrench Set

  - 4mm, 6mm

- 13mm Combination Wrench
- Tape Measure

© 2020 Avid CNC
All Rights Reserved

Section 1: Rack & Pinion Drive Assembly

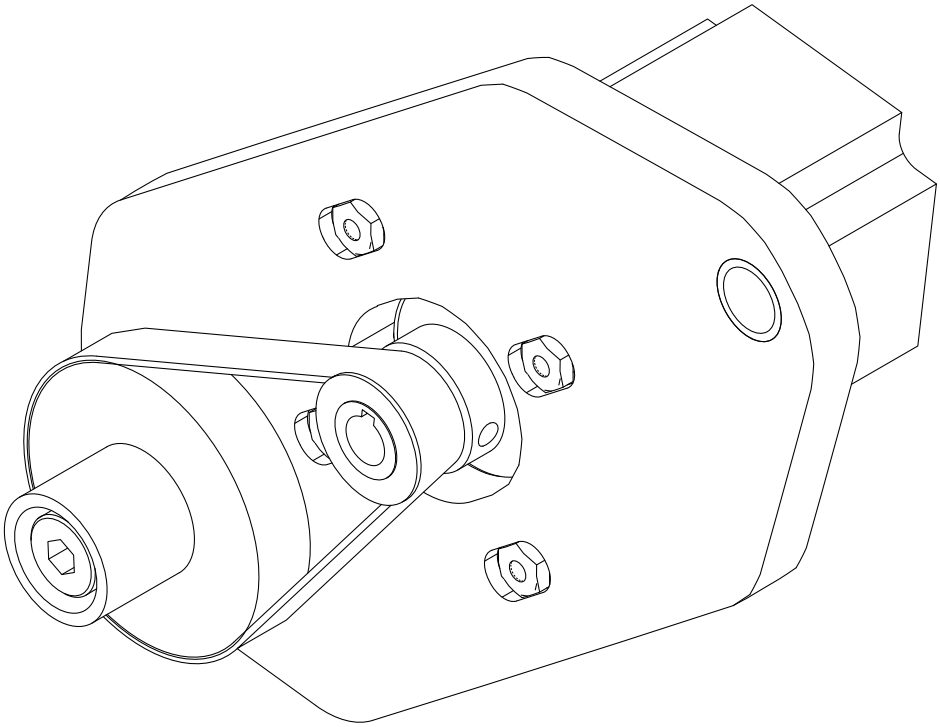

© 2020 Avid CNC
All Rights Reserved

1.1 NEMA 23 Drive Assembly

1.1.1

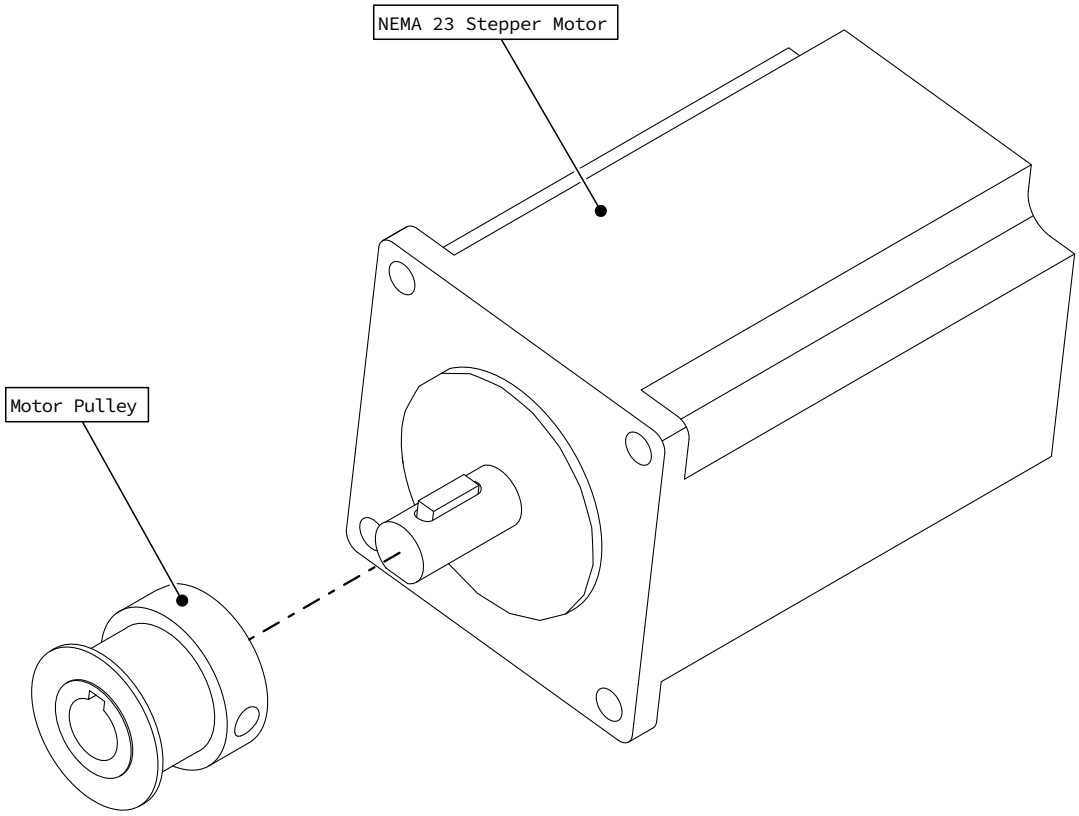

- Remove tape on motor shaft.
- Loosen motor pulley set screws.
- Install motor pulley on motor shaft as indicated.

Assembly Note

Ensure keyway is fully seated in slot on motor shaft to allow easy installation of the motor pulley.

© 2020 Avid CNC
All Rights Reserved

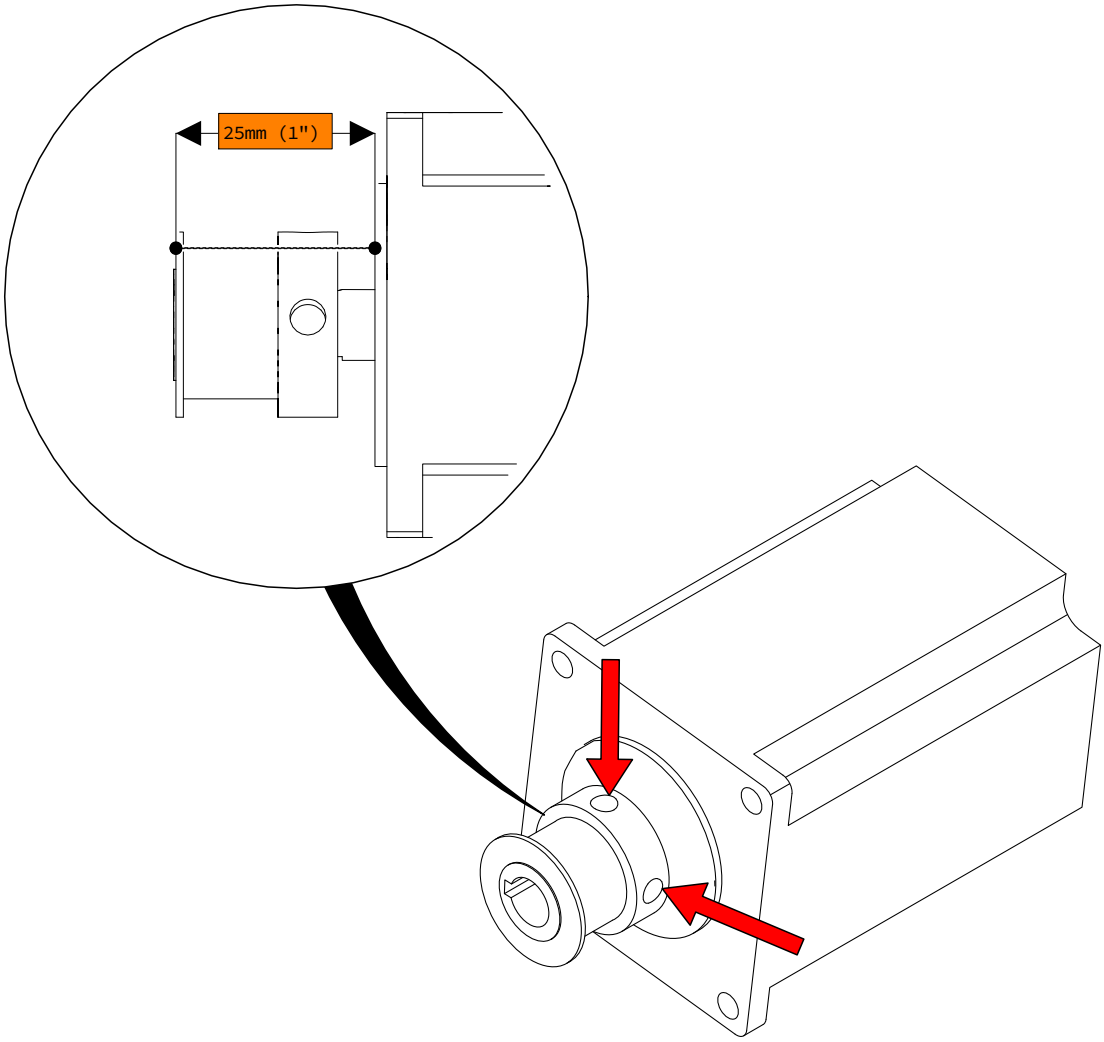

- Position motor pulley to dimension shown.
- Tighten indicated set screws. *Red Arrows*

© 2020 Avid CNC
All Rights Reserved

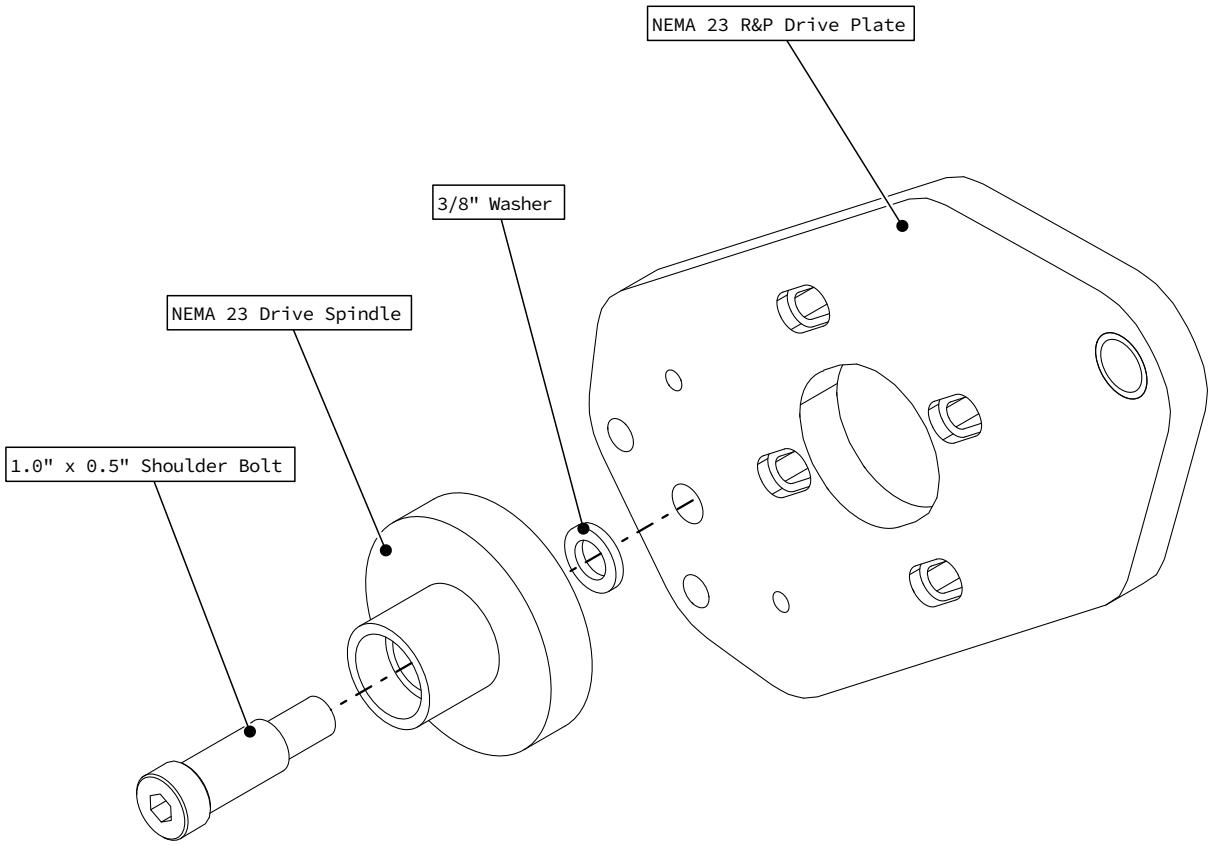

- Install spindle on drive plate as indicated.
- Fully tighten shoulder bolt.

Assembly Note

Ensure the drive spindle is installed on the correct side of the drive plate. The spindle will be on the same side as the recessed nut slots, as shown in the above figure.

© 2020 Avid CNC
All Rights Reserved

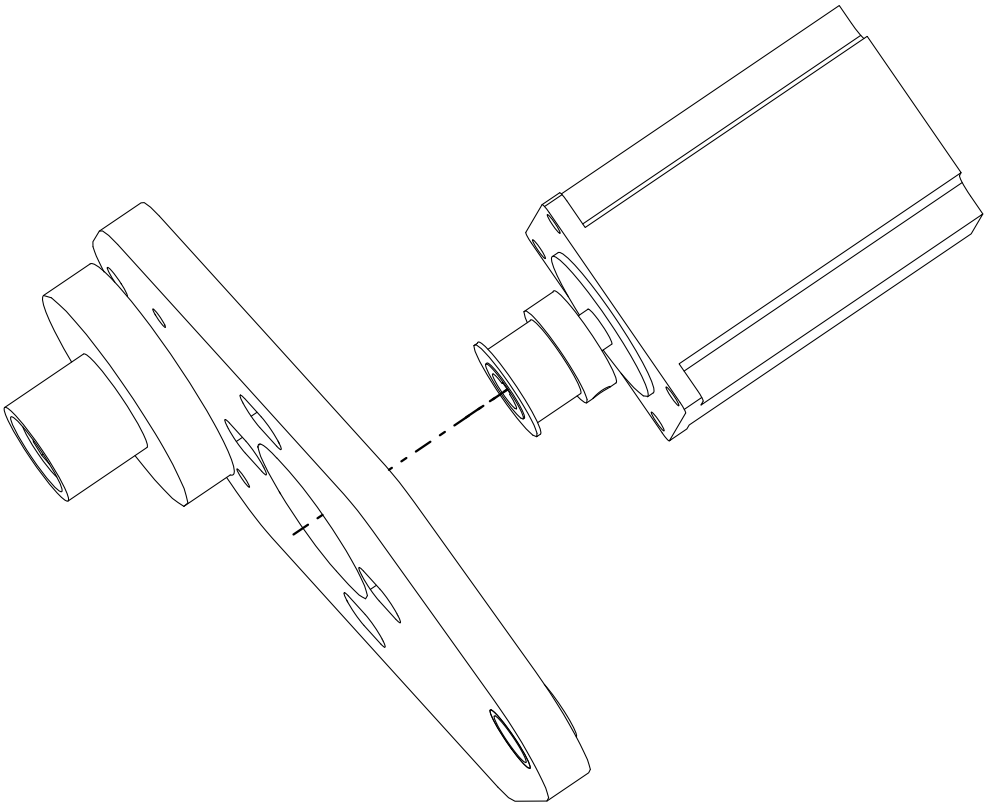

- Place the motor on the drive plate as indicated.

© 2020 Avid CNC
All Rights Reserved

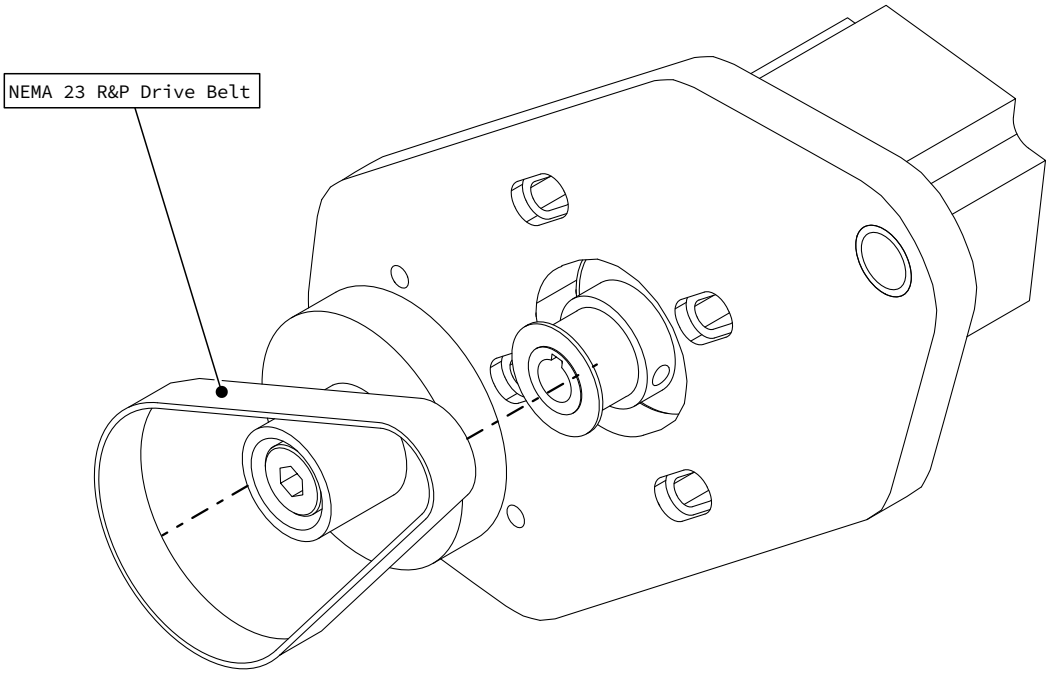

- Install drive belt on motor pulley and drive spindle as indicated.

© 2020 Avid CNC
All Rights Reserved

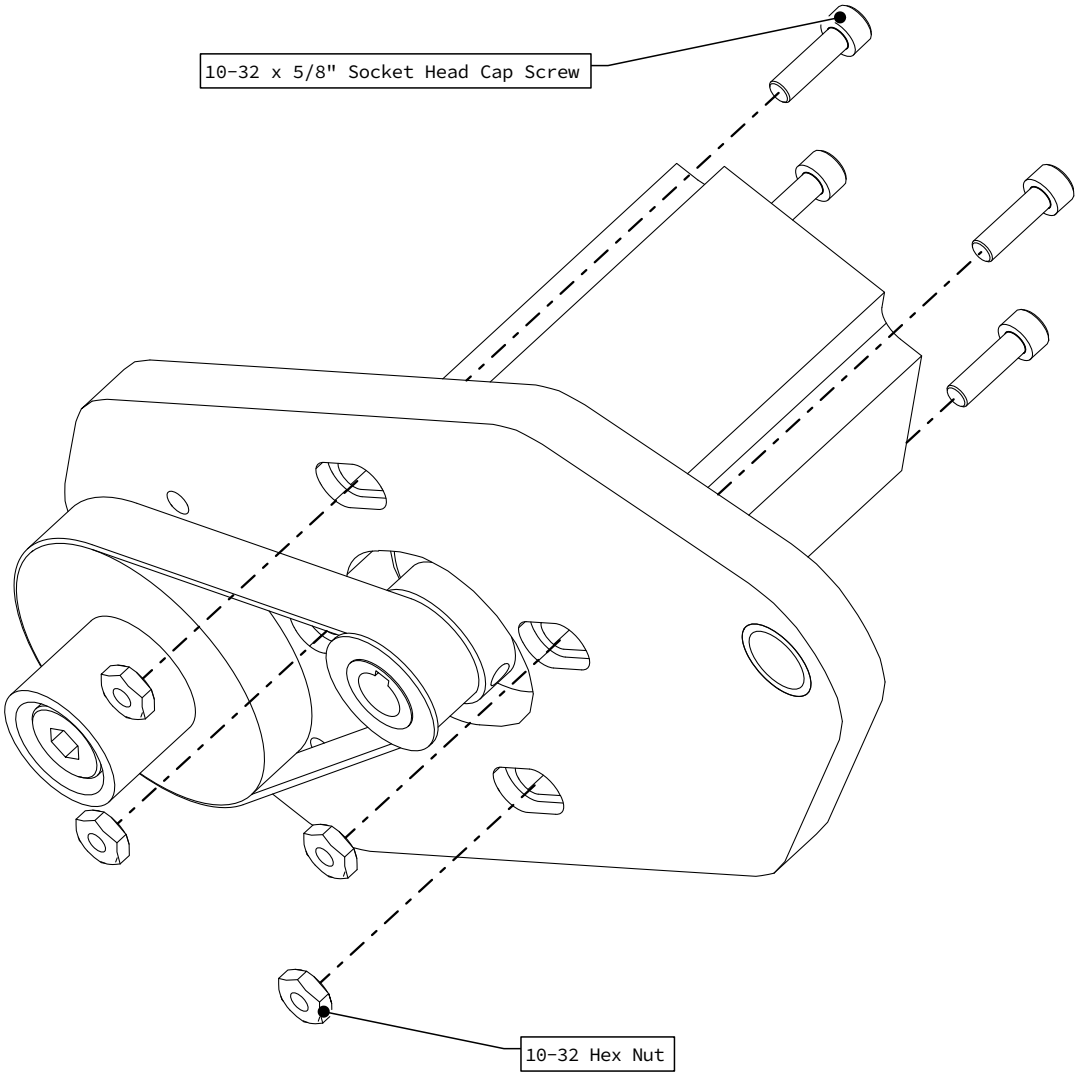

- Insert motor fasteners as indicated.

Assembly Note

Do not tighten these fasteners prior to adjusting the belt tension in the following step.

© 2020 Avid CNC
All Rights Reserved

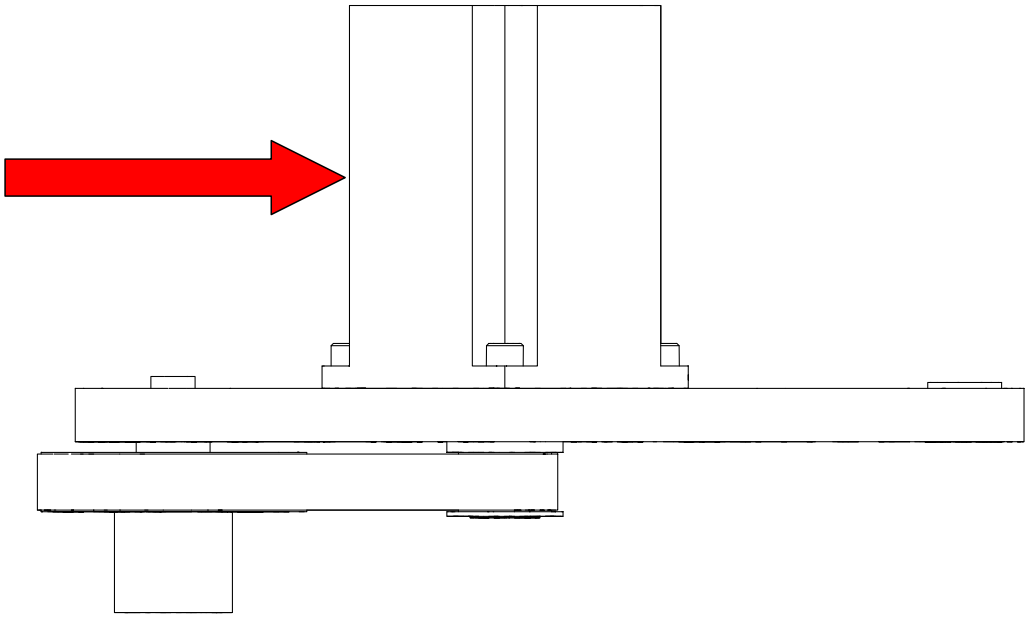

- Tension belt by applying pressure to motor in the indicated direction.
- Keep this pressure on the motor and tighten the 10-32 x 5/8" motor screws.

© 2020 Avid CNC
All Rights Reserved

1.2 NEMA 34 Drive Assembly

1.2.1

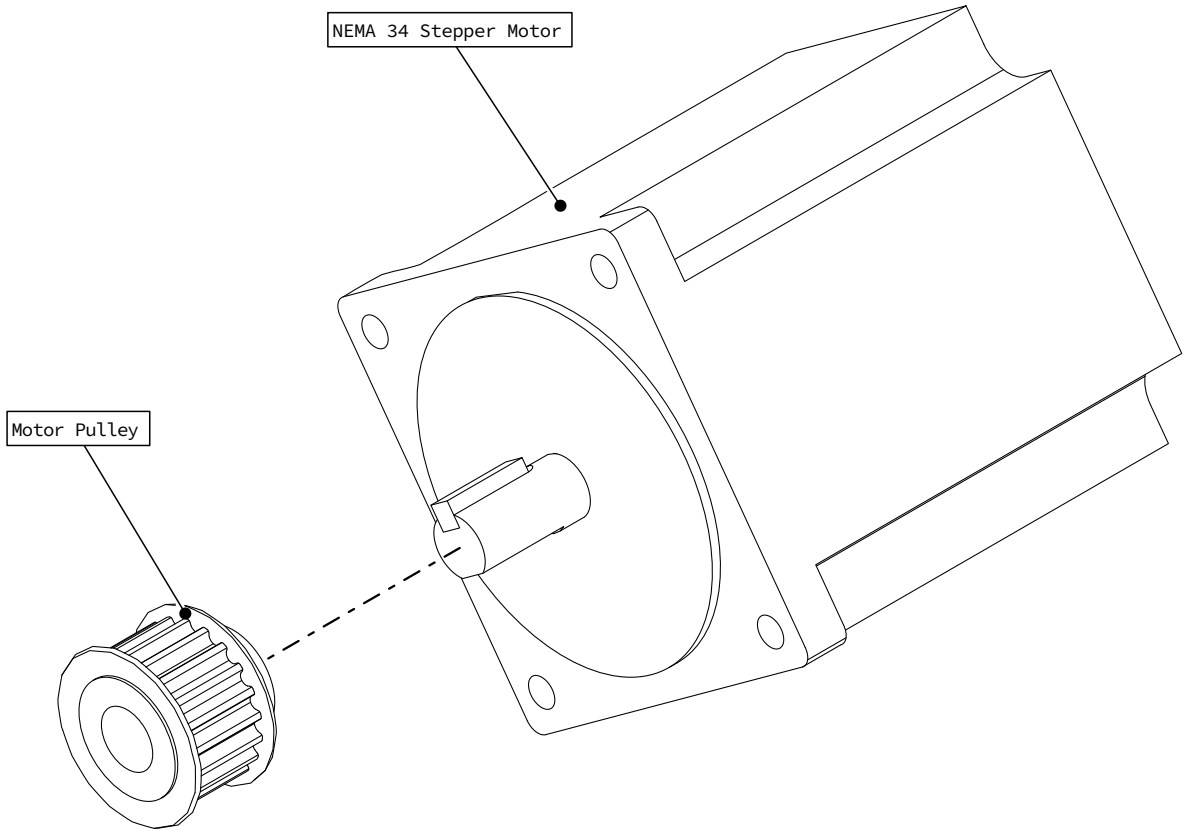

- Remove tape on motor shaft.
- Loosen motor pulley set screws.
- Install motor pulley on motor shaft as indicated.

Assembly Note

Ensure keyway is fully seated in slot on motor shaft to allow easy installation of motor pulley.

Version 2020Q4.1
© 2020 Avid CNC
All Rights Reserved

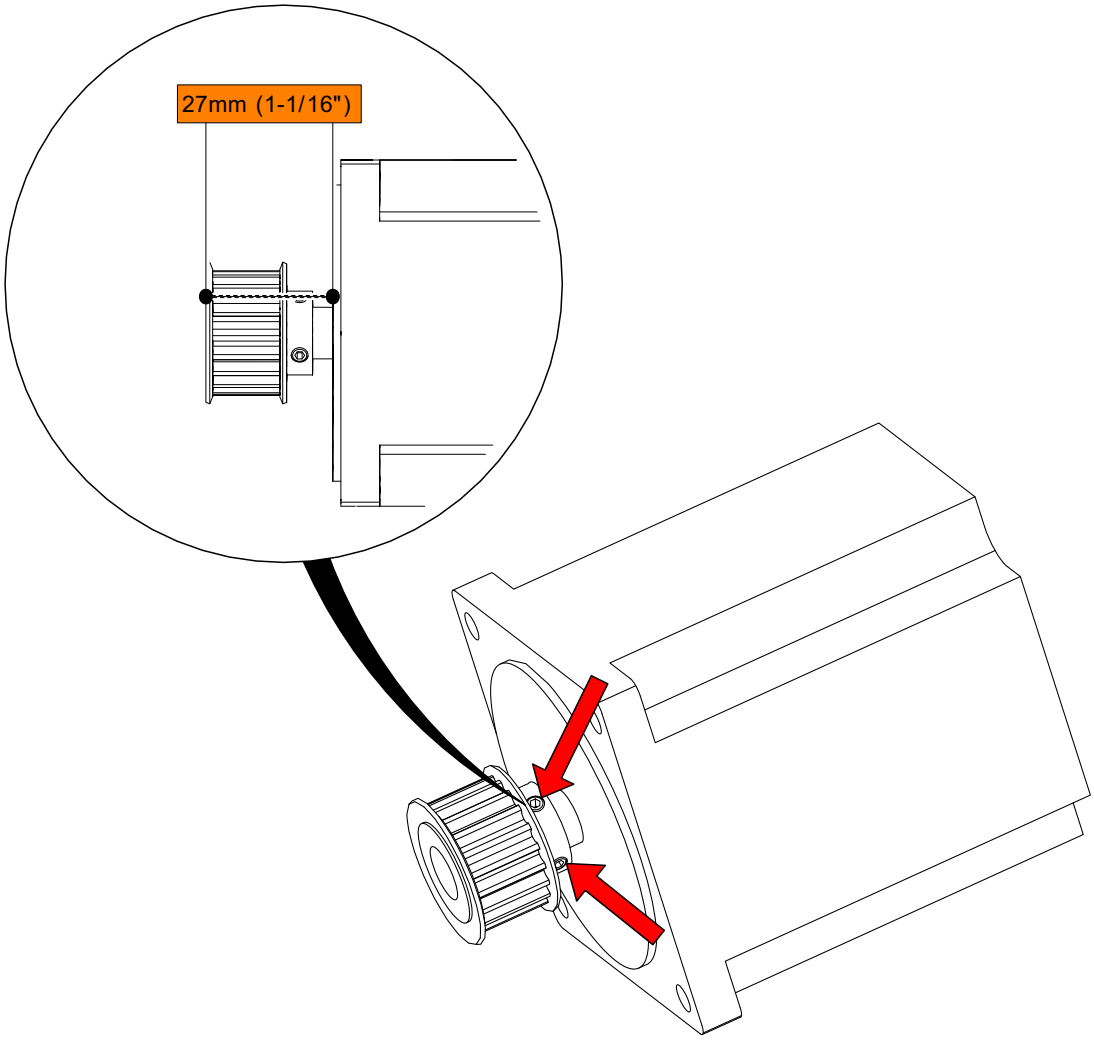

- Position motor pulley to dimension shown.
- Tighten set screws as indicated. *Red Arrows*

© 2020 Avid CNC
All Rights Reserved

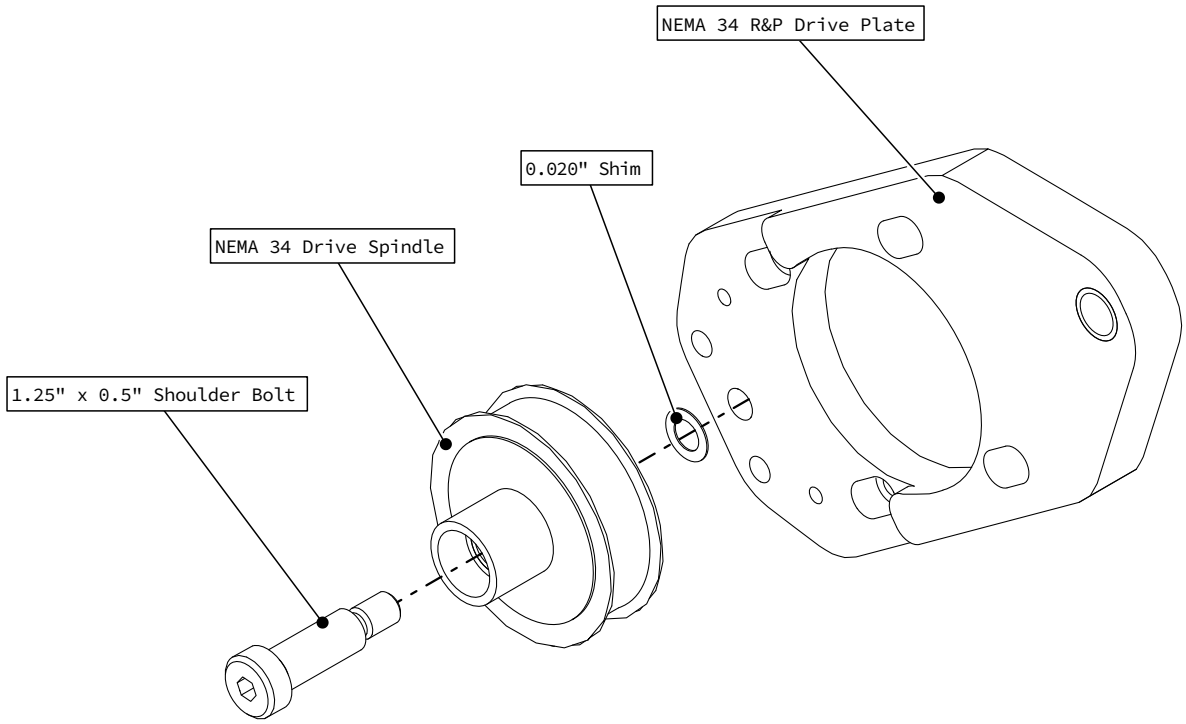

- Install spindle on drive plate as indicated.
- Fully tighten shoulder bolt.

Assembly Note

Ensure the drive spindle is installed on the correct side of the drive plate. The spindle will be installed on the recessed portion, as shown in the above figure.

© 2020 Avid CNC
All Rights Reserved

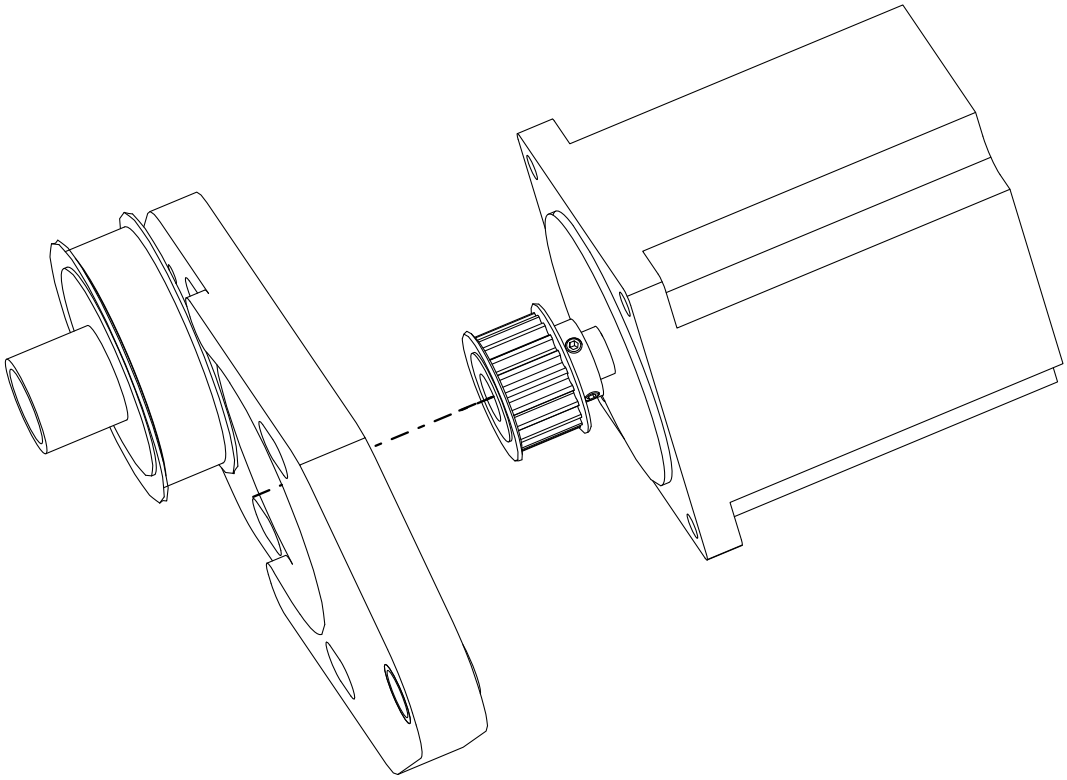

- Place the motor on the drive plate as indicated.

© 2020 Avid CNC
All Rights Reserved

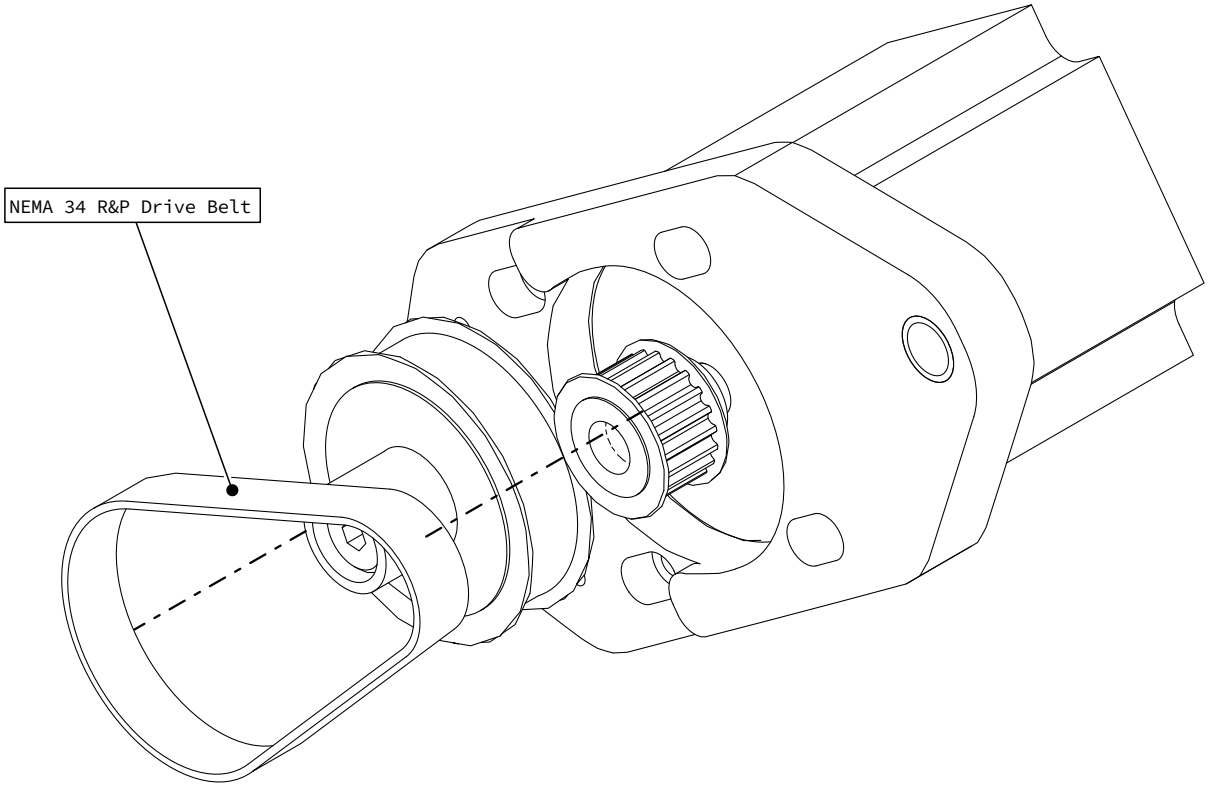

- Install drive belt on motor pulley and drive spindle as indicated.

© 2020 Avid CNC
All Rights Reserved

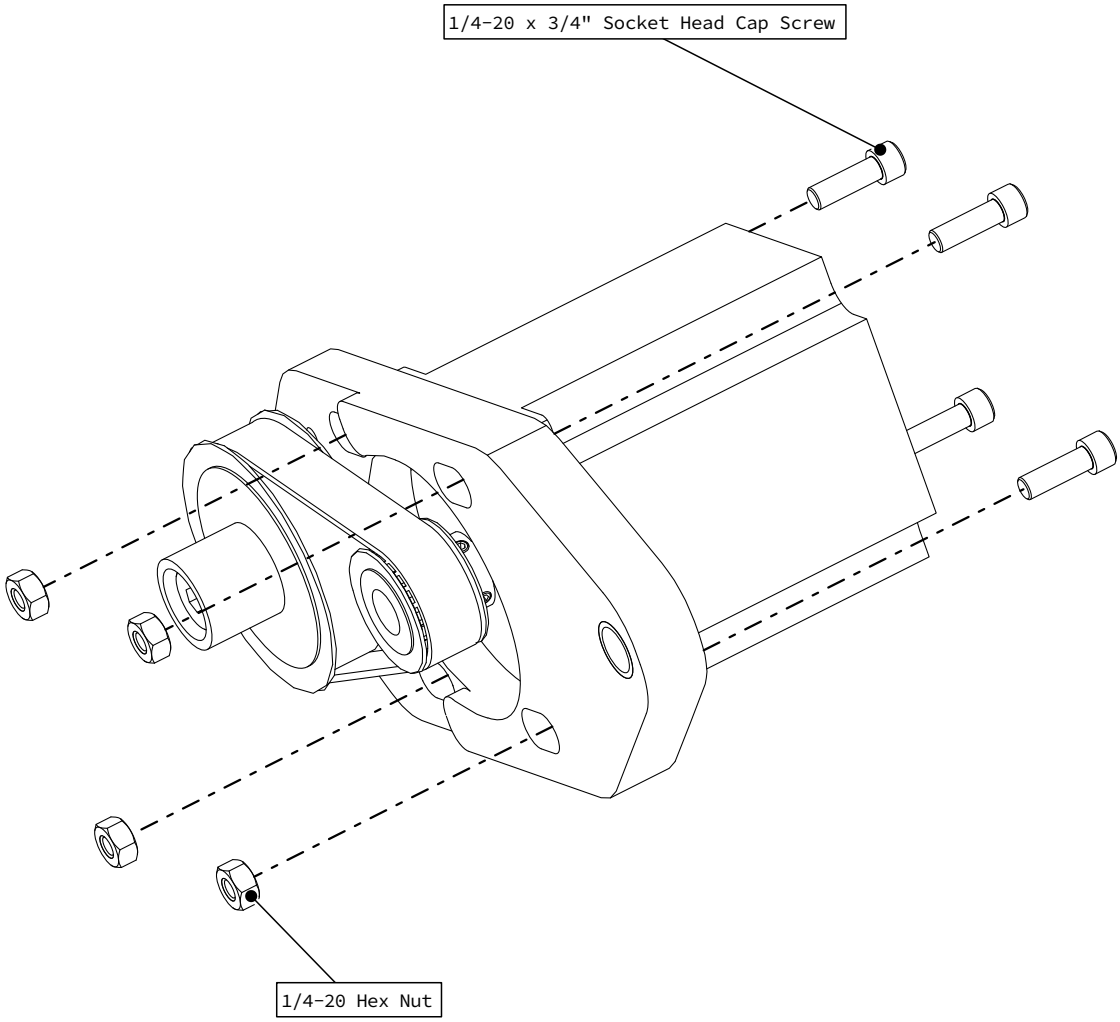

- Insert motor fasteners as indicated.

Assembly Note

Do not tighten these fasteners prior to adjusting the belt tension in the following step.

© 2020 Avid CNC
All Rights Reserved

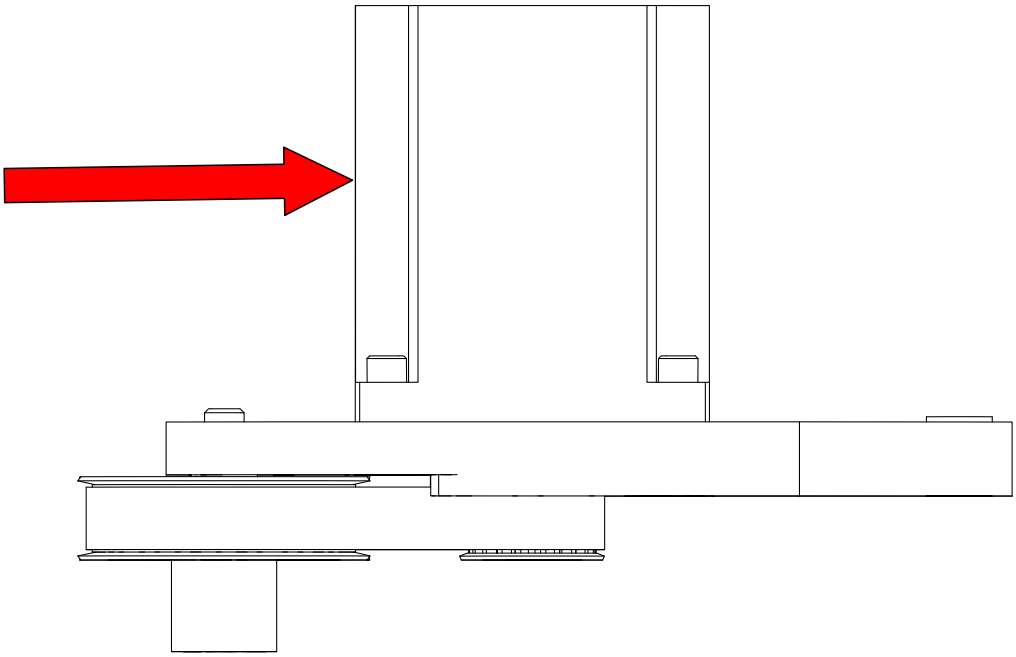

- Tension belt by applying pressure to motor in the indicated direction.
- Keep this pressure on the motor and tighten the 10-32 x 5/8" motor screws.

© 2020 Avid CNC
All Rights Reserved

Section 2: Rack & Pinion Drive Installation

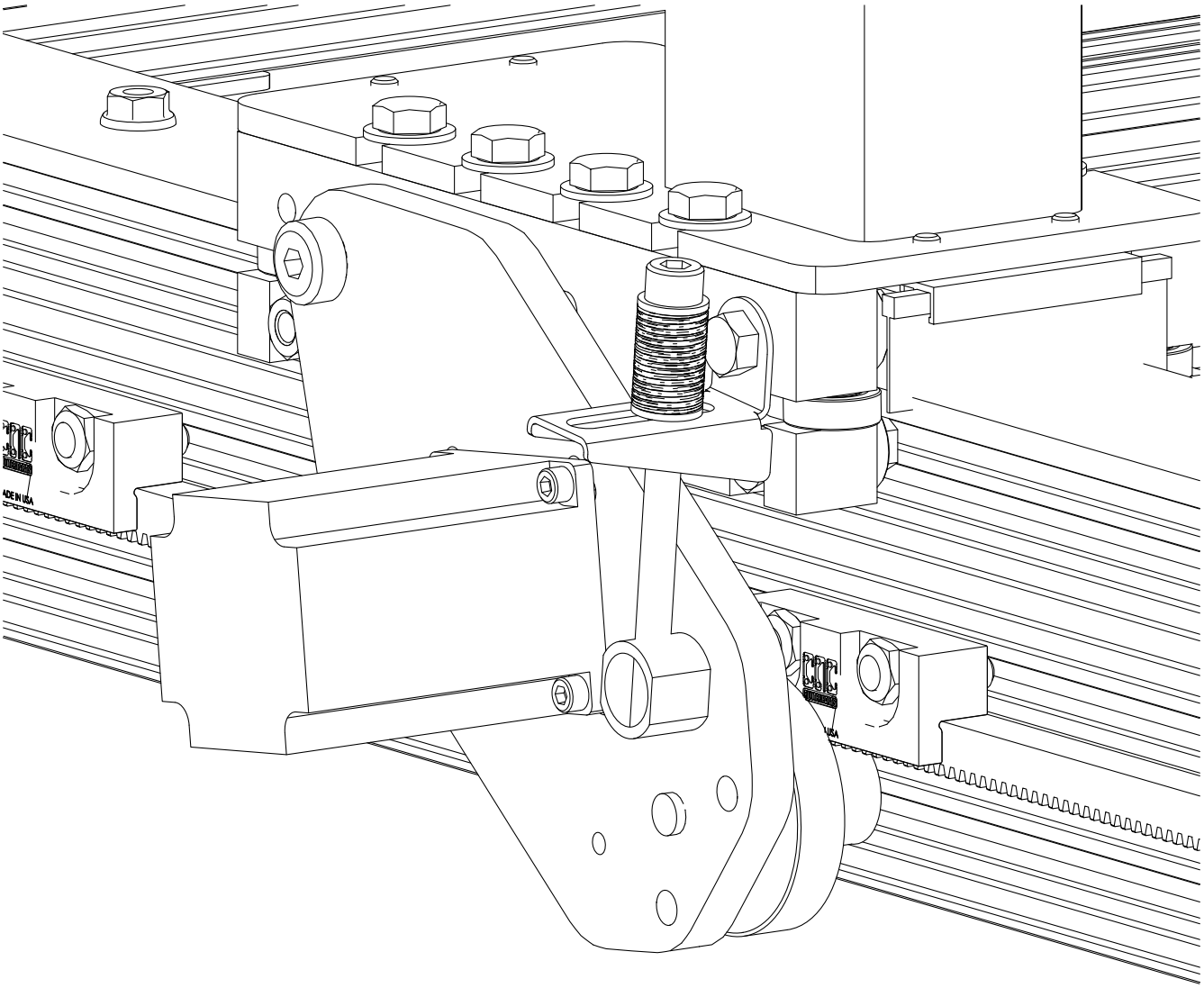

Note

Installation is shown using Avid CNC extended linear carriages and gear rack.

© 2020 Avid CNC
All Rights Reserved

2.1 Drive Installation

2.1.1

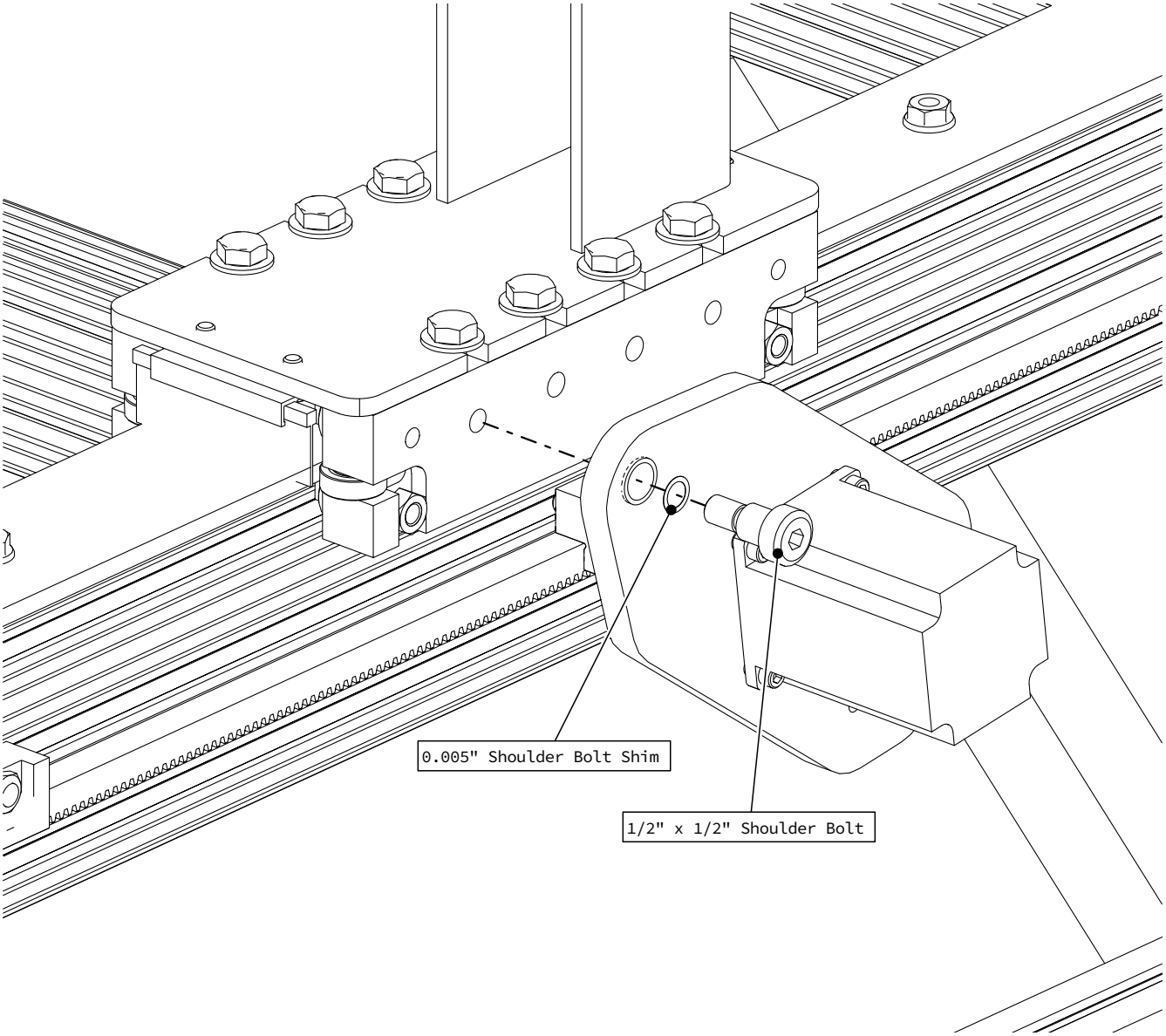

- Attach an R&P Assembly to the linear carriage as indicated.

© 2020 Avid CNC
All Rights Reserved

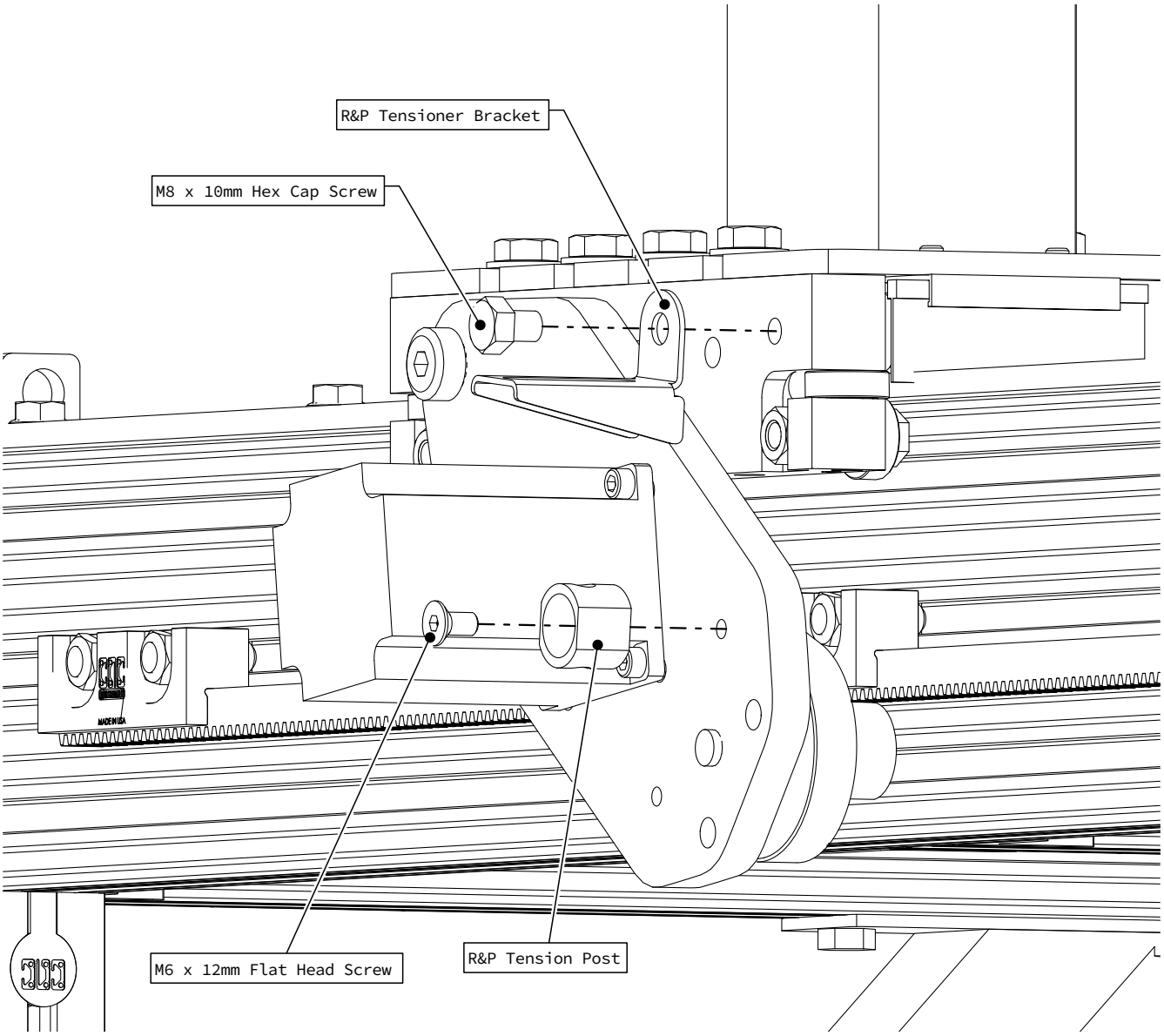

- Install R&P Tensioner Bracket and Tension Post as indicated.
- Partially tighten fasteners.

© 2020 Avid CNC
All Rights Reserved

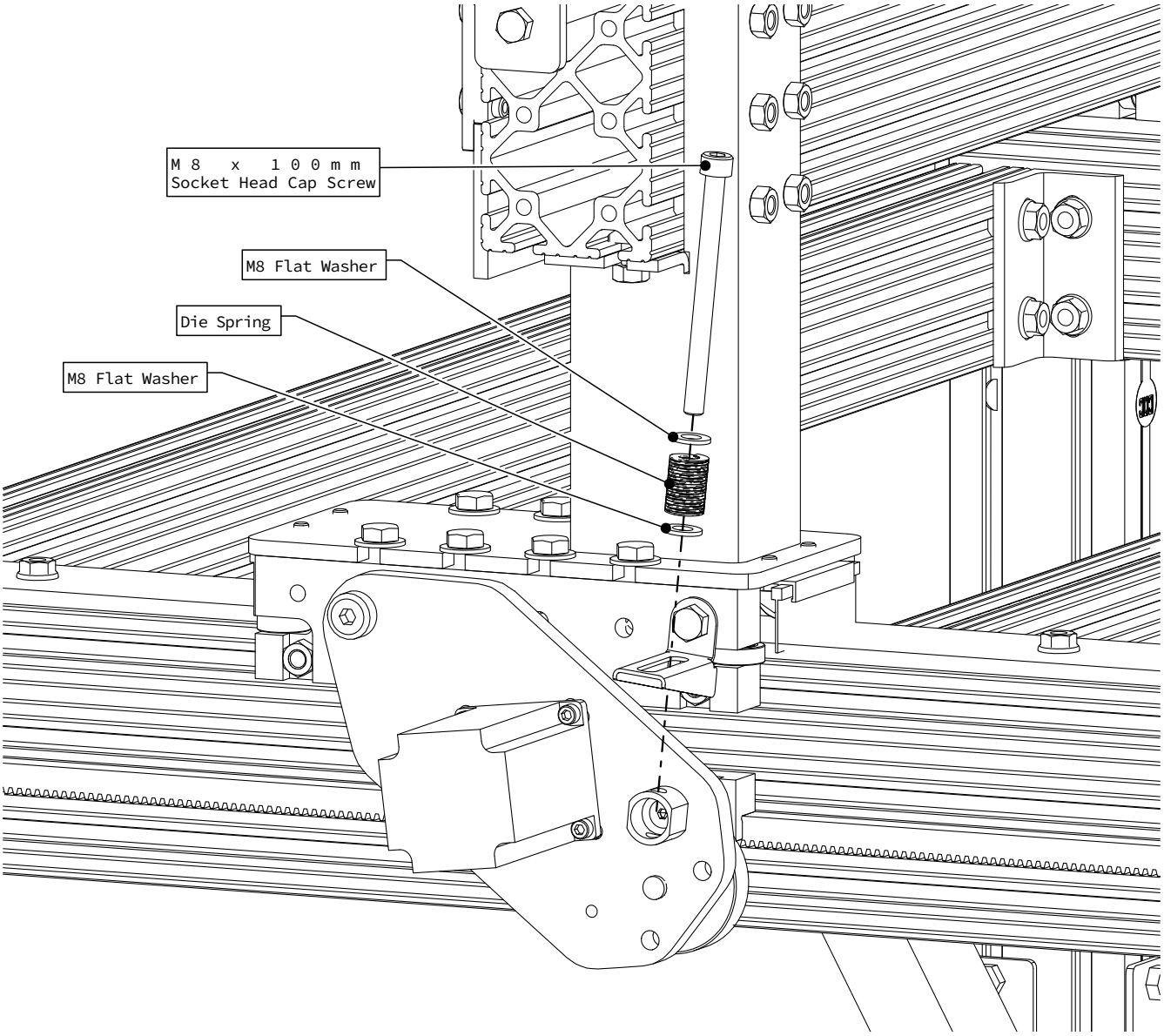

- Install tensioner screw as indicated and hand tighten.
- Tighten R&P Tension Bracket M8 x 10mm fastener.

© 2020 Avid CNC
All Rights Reserved

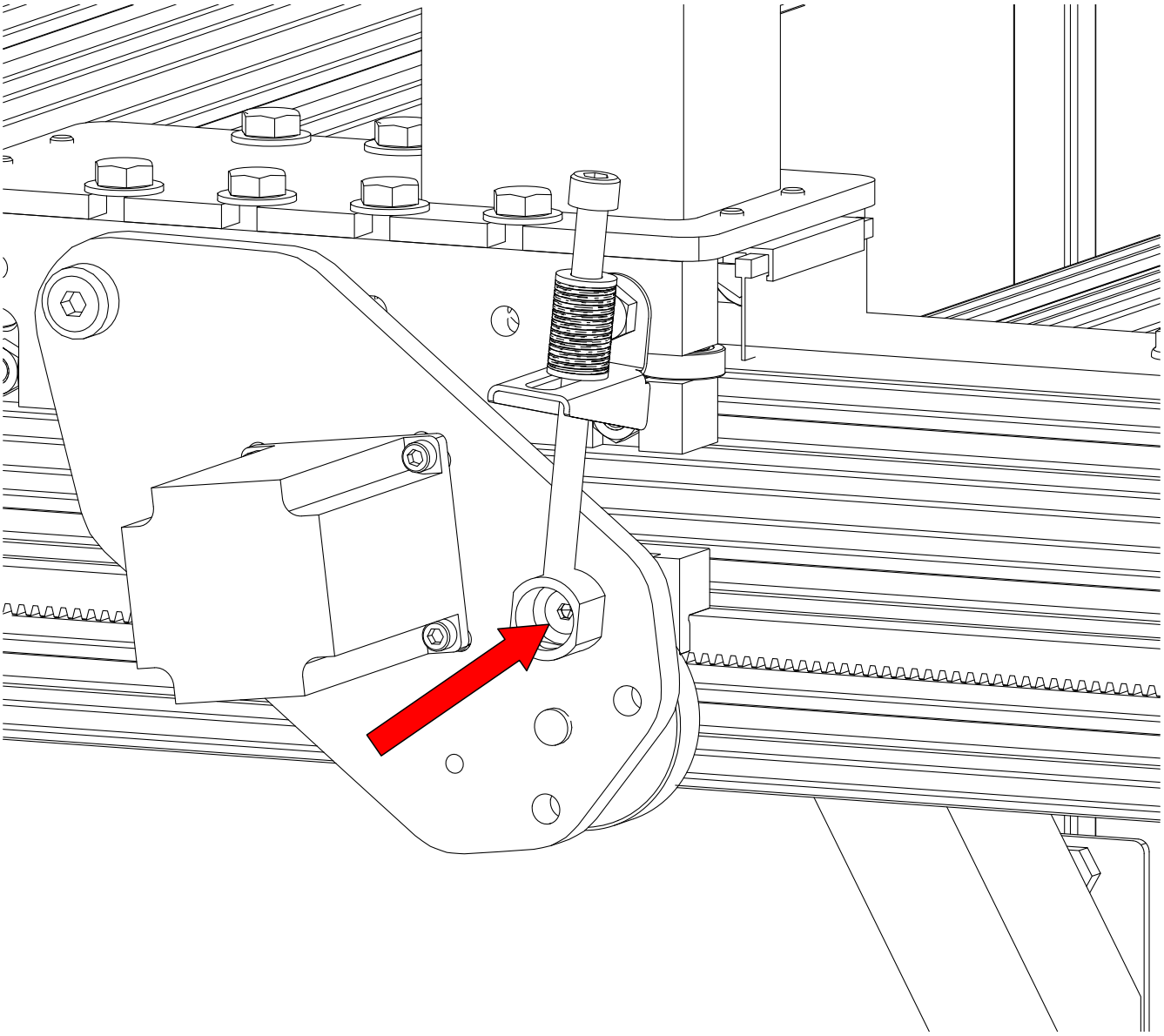

- Partially remove the tension screw as indicated.
- Tighten R&P Tension Post fastener indicated by the red arrow.

© 2020 Avid CNC
All Rights Reserved

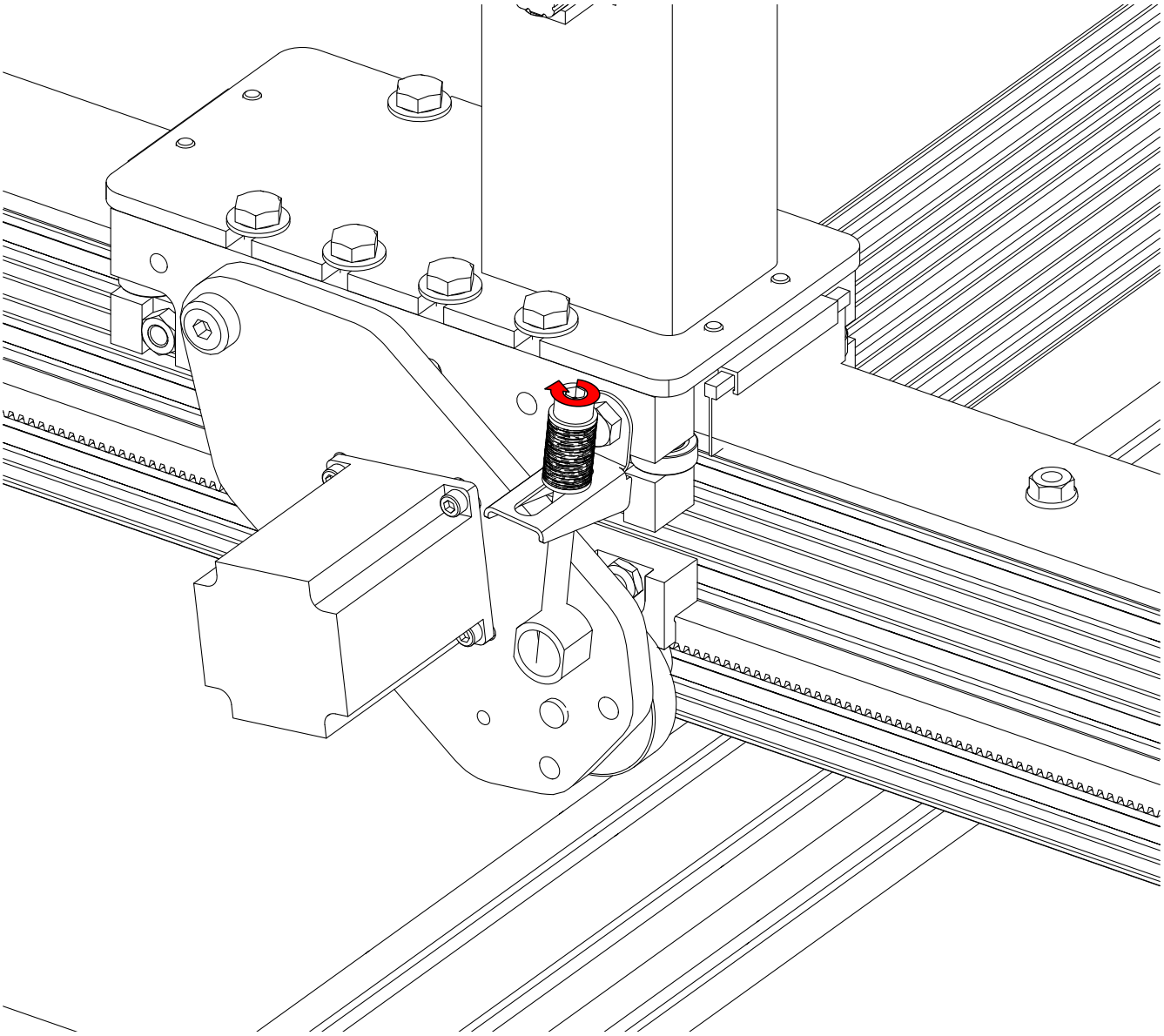

- Hand tighten tension screw until finger tight.
- Set initial R&P tension by tightening tension bolt three additional turns.

© 2020 Avid CNC
All Rights Reserved

2.2 Mach4 Settings

The base resolution of the system is 190.986 steps per inch with a 200 steps per revolution stepper motor. Multiply this by however many microsteps your drive has. For example, with a G540 (10x microstepper), your resolution would be 1909.86 steps per inch.

© 2020 Avid CNC
All Rights Reserved